HELI

Reliable special designed instrument

Neutral indicator
Preheating indicator
Left turning indicator
Oil lever gauge
*Seat switch
LED display area
Low fuel lever alarm indicator
Hand brake indicator
Engine fault indicator (for electronic-controlled engine)

Engine oil pressure alarm indicator
*Oil-water separation alarm indicator
Right turning indicator
Water temperature meter
*Seatbelt alarm indicator
*Swiping card area
*Filter block alarm indicator
No charging alarm indicator
*High torque converter oil temperature alarm indicator

Standard

(Item with * are optional)

- Reliable special meter display the whole truck's working condition, fault detect and other important information completely which make the operator master the whole truck condition directly and conveniently.

Standard configuration

Horn	Standard fork
Control valve	Integrated electric box
Wholly hydraulic-powered steering	Hydraulic oil circuit filter
Half enclosed seat	Flow regulator
Backrest	Wide view mast
Back view mirror	Air intaking device
Front combined lamp	Durable tread tyre
Transmission oil filter	Lifting and tilting operation lever
Engine flame out device	Traction pin
Cable type parking brake	Head lamp
Driver's tool	Hydraulic oil dipstick
Rear combined lamp	Overhead guard
Backward buzzer	Torque converter oil dipstick
Tilt oil circuit self lock valve	Combined instrument
Tilt adjustable steering column	Electro-hydraulic direction changing
Overhead guard rain cover	

Optional

Driver's cab	Torque converter oil temperature meter
Warning light	Tilting cylinder bush
High air exhausting device	Customer made color
Double air cleaner	Optional attachments
Suspension seat	Steel protection net
Lengthening fork extension	Double-tyre and protection device
Warm air blower	Rotating seat for lpg
Solid tyre	Single/dual fuel system
Widen fork arm carrier	Low speed alrm
Wind shield	
Cleansing muffler	
Fire extinguisher muffler	
Fire extinguisher	
Rear working light	
Air conditioner (certain type)	
Travelling control system	

ANHUI HELI CO., LTD.
Add / No.668, FangXing Road, Hefei, China
Fax / +86-551-63639966

Tel / +86-551-63639068(America); 63639258(Europe);
63639358(Asia); 63662105(Africa & Middle East);
63639530(Key Accounts Division); 63662105(Wheel loader)

* Our products are subject to improvements and changes without notice.

Design&Print:Fokeli Printing _20210305

HELI

2-3.5 t

H3 series Internal Combustion Counterbalanced Forklift Truck

www.heliforklift.net

H3 SERIES 2-3.5 t FLEXIBLE TRANSMISSION

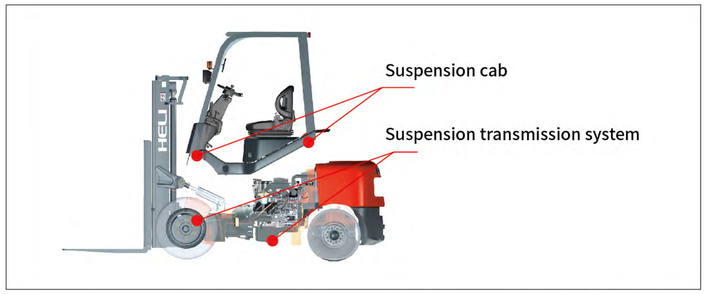

Vibration reduced
Noise reduced

- Suspension cab and suspension transmission system isolate truck vibration and improve driving comfort.
- Noise around ear is reduced through down the tilting cylinder under the floor board and using fully closed patch type driver's cab.
- Lower damping device inside the lifting system reduces mast shock and vibration, avoiding crash noise caused by goods falling to the ground.

Workspace increased

- Space around foot is effectively increased through up steering unit and using suspension type inching.
- The operation space is enlarged by heightened overhead guard and using large arc shape of the overhead guard's front leg
- Semi-suspension seat, steering wheel with small diameter, electro-hydraulic direction changing and automobile type double joystick combined switch effectively improve driving comfort.

Operator's view improved

- Operator's front view is improved through the assembling of stand wide view mast and lowering the dashboard.
- Operator's rear view improved through the CAE optimal designed counterweight.

Working efficiency improved

- Small turning radius makes steering flexible and easy.
- The truck has fast lifting speed, good gradeability and high efficiency.
- High working efficiency guarantees the truck could meet the requirements for various kinds of complicated work condition perfectly wherever at port, dock and railway station.

Loading capacity increased
Stability improved
Reliability improved

- The hot air reflow isolating device, optimal thermal dissipation duct and aluminum plate-fin type radiator improve cooling ability and ensure engine work reliability.
- Automobile type oil filling cap and optimal oil filling channel structure and process ensure whole truck's safety.
- The constant displacement pump load sensing steering system increases the lifting speed and reduces the hydraulic oil temperature.
- The optimal design of key parts like frame, mast, overhead guard and steering axle improve the whole truck's safety and reliability.
- The retroposition of whole truck's gravity center improve loading capacity, stability and safety.

Increased hood opening angle

- Enlarged internal space is convenient for engine and transmission box maintenance.
- Increased hood open angle contributes to quick and convenient maintenance.

HELI smart fleet management system (optional)

- Vehicle positioning
- Remote diagnosis
- Remote monitoring
- Maintenance reminder
- Battery management
- Statistical form
- Vehicle management
- Identification recognition (optional)
- Weight management (optional)
- Collision management (optional)

H3 SERIES 2-3.5 t FLEXIBLE TRANSMISSION

Manufacturer and technical parameters

	Character						
1.01	Manufacturer			HELI			
1.02	Model			CPCD20	CPCD25	CPCD30	CPCD35
1.03	Rated Capacity		kg	2000	2500	3000	3500
1.04	Load Center		mm	500			
1.05	Operation Mode			Seat-type			
	Dimensions						
2.01	Lifting Height(standard)	H	mm	3000			
2.02	Mast Overall Height(Fork to the ground and mast be vertical)	H1	mm	2000	2000	2070	2120
2.03	Max.Fork Lifting Height(With backrest)	H2	mm	4030	4030	4217	4217
2.04	Free Lift Height	H3	mm	150	150	155	160
2.05	Overall Height	H4	mm	2150	2150	2170	2170
2.06	Min.Groung Clearance(At the mast)	H5	mm	115	115	135	135
2.07	Distance From the Surface of the Seat to the Overahead Guard	H6	mm	1030	1030	1030	1030
2.08	Traction Pin Height	H9	mm	275	275	280	280
2.09	Backrest Height(Calculated from the surface of the fork)	H13	mm	1000	1000	1182	1177
2.10	Overall Length(With fork/Without fork)	(L/L')	mm	3501/2581	3709/2639	3829/2759	3834/2764
2.11	Wheel Base	L1	mm	1650	1650	1700	1700
2.12	Front Overhang	L2	mm	474	474	489	494
2.13	Rear Overhang	L3	mm	457	515	570	570
2.14	Overall Width	W1	mm	1150	1150	1225	1225
2.15	Tread (Front tread/Rear tread)	(W3/W2)	mm	970/970		1000/970	
2.16	Fork Adjustable Range(the external of the fork)(Max./Min.)	W5	mm	1030/244	1030/244	1060/250	1060/250
2.17	Min.Turning Radius(Exterior)	r	mm	2170	2240	2400	2420
2.18	Min.Turning Radius(Interior)	r'	mm	180	180	200	200
2.19	Min.Right Angle Stacking Aisle Width	Ra	mm	2200	2280	2380	2400
2.20	Mast Tilting Angle	α/β	deg.	6/10	6/10	6/10	6/10
2.21	Fork Size	L4xWxT	mm	920x122x40	1070x122x40	1070x125x45	1070x125x50
	Weight						
3.01	Total Weight		kg	3440	3810	4355	4715
3.02	Weight Distribution Loaded (Front/Rear)		kg	4740/630	5440/800	6440/900	7380/820
3.03	Weight Distribution Unloaded (Front/Rear)		kg	1570/1800	1520/2200	1700/2640	1850/2850
	Wheel and Tyre						
4.01	Wheel Number x = Drive Wheel (Front/Rear)			2X/2			
4.02	Tyre Type(Front/Rear)			Pneumatic Tyre			
4.03	Tyre Size(Front/Rear)			7.00-12-12PR/6.00-9-10PR		28x9-15-14PR/6.5-10-10PR	
4.04	Service Brake			Hydraulic-Foot Pedal			
4.05	Parking Brake			Mechanical-Hand Lever			

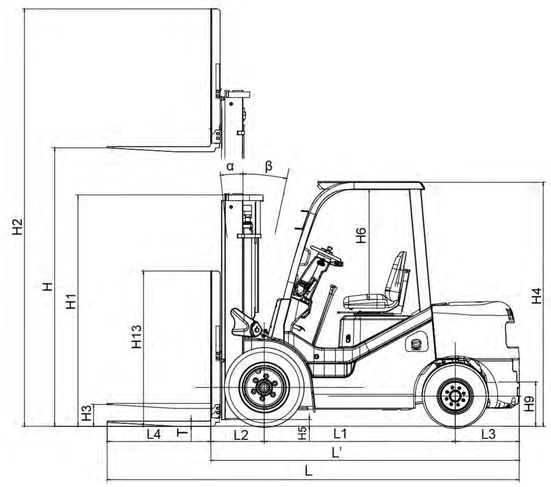

Ast: right angle stacking aisle width
a: Clearance
L4: Fork Length

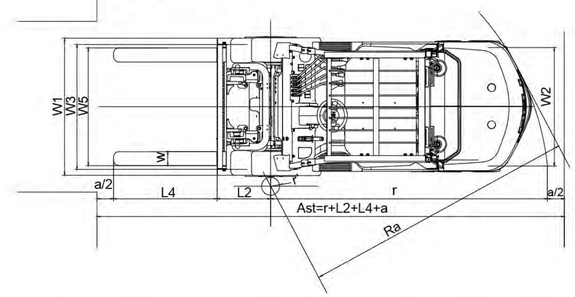

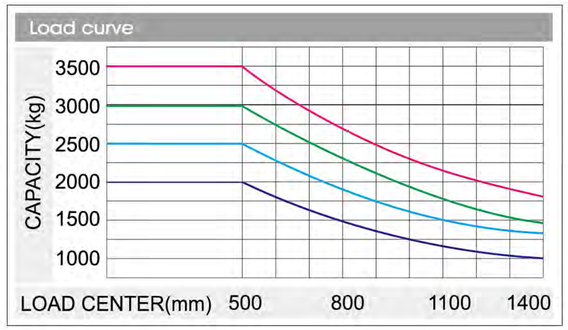

CP(Q)(Y)20	CP(Q)(Y)25	CP(Q)(Y)30	CP(Q)(Y)35
CP(Q)(Y)D20	CP(Q)(Y)D25	CP(Q)(Y)D30	CP(Q)(Y)D35
CPC20	CPC25	CPC30	CPC35
CPCD20	CPCD25	CPCD30	CPCD35

Note: The vertical axis stands for load capacity and the horizontal axis stands for load center which is calculated from the front of the fork. The base point of the standard load refers to the center position of the cube with 1000mm length of side. When mast is tilted forward, nonstandard fork usage or load with over wide goods, load capacity will be reduced. Different load capacity in different load center can be known in time through load chart.

WIDE VIEW MAST

Mast model	Max. lifting height mm	Load capacity (load center 500mm)				Mast overall height (fork to the ground)			Service weight				Mast tilting angle (°) α / β
		2t	2.5t	3t	3.5t	2-2.5t	3t	3.5t	2t	2.5t	3t	3.5t	
M200	2000	2000	2500	3000	3500	1495	1570	1680	3280	3650	4250	4610	6/10
M250	2500	2000	2500	3000	3500	1745	1820	1930	3330	3700	4300	4650	6/10
M300	3000	2000	2500	3000	3500	1995	2080	2180	3370	3740	4340	4700	6/10
M330	3300	2000	2500	3000	3500	2145	2220	2330	3400	3770	4360	4730	6/10
M350	3500	2000	2500	3000	3500	2245	2320	2430	3420	3790	4380	4750	6/10
M370	3700	2000	2500	3000	3500	2345	2420	2530	3430	3800	4400	4760	6/10
M400	4000	2000	2400	3000 *3000	3450 *3500	2545	2620	2730	3510	3880	4490	4840	6/10 *6/10
M425	4250	2000	2250 *2500	2950 *3000	3400 *3500	2670	2745	2855	3530	3900	4510	4870	6/6 *6/6
M450	4500	1950 *1950	2050 *2450	2750 *3000	3300 *3350	2795	2870	2980	3560	3930	4540	4900	6/6 *6/6
M500	5000	1600 *1850	1650 *2300	2500 *3000	3000 *3200	3045	3120	3230	3600	3970	4580	4950	6/6 *6/6
M550	5500	*1750	*2100	*2850	*2900	3345	3420	3530	3700	4070	4690	4990	*6/6
M600	6000	*1700	*1800	*2750	*2300	3595	3670	3780	3740	4110	4730	5040	*6/6

Note: (1) *stands for the rated capacity when the front tyre is double-tyre. (2) When the front tyre of the 2-3.5t truck is double tyre, the service weight of the truck is the weight in the table plus 110kg.

Performance									
Model		CPCD20	CPCD25	CPCD30	CPCD35	CPCD20	CPCD25	CPCD30	CPCD35
Max.Drawbar Pull (Loaded/Unloaded)	kN	20/12	20/13	21/13	21/14	20/13	20/13	20/14	19/15
*Max.Gradeability (Loaded/Unloaded)	%	30/24	30/24	30/26	27/25	30/27	30/24	23/23	24/22
Max.Traveling Speed (Loaded/Unloaded)2km/h	%	25/24	25/24	24/25	22/25	28/23	26/22	23/23	20/22
Max.Gradeability(Loaded/Unloaded)	km/h	18/19	18/19	18/19	18/19	17/18	17/18	17/18	17/18
Lifting Speed (Loaded/Unloaded)	mm/s	560/600	560/600	490/500	420/450	560/600	560/600	500/550	440/470
Lowing Speed (Loaded/Unloaded)	mm/s	450/500	450/500	450/500	450/500	450/500	450/500	450/500	450/500
Drive and Transmission Control Device									
Engine Mode		KUBOTA V2403-CR-TE5B				Mitsubishi S4S			
Engine Rated Power	kW/rpm	42.6/2400				35.3/2250			
Engine Rated Torque	Nm/rpm	195.6/1500				177/1700			
Engine Cylinder Number-Borexstroke	/L	4-87x102.4				4-94x120			
Engine Displacement	L	2.434				3.331			
Power Type		Diesel				Diesel			
Emission		Euro Stage Ⅴ/EPA Tier 4				Euro Stage Ⅲ A/China Stage Ⅲ			
Battery(Voltage/Capacity)	V/Ah	12/95				12/80			
Engine Fuel Tank Capacity	L	60				60			
Tranmission Box Shifting Gears(Front/Rear type)		1-1Power Shift T/M / 2-2 Manual Shift T/M							

Engine Model and Main Specification for Option

Engine Model	Rated Power /Rotating Speed (Kw/rpm)	Rated Torque/Rotating Speed (Nm/rpm)	Engine Displacement (L)	Engine Cylinder Number-Borexstroke	Power Type	Emission
ISUZU 4JG2PE-02	44.9/2450	186.3/1600-800	3.05	4-95.4×107	Diesel	
ISUZU 4JG2	35.0/2450	170/1700	3.05	4-95.4×107	Diesel	Euro Stage Ⅲ A/China Stage Ⅲ
ISUZU C240	35.4/2500	139.9/1800	2.369	4-86×102	Diesel	Euro Stage Ⅲ A/China Stage Ⅲ
KUBOTA WG2503	GAS:42.8/2600 LPG:43.5/2600	GAS:163/1800 LPG:173.7/1400	2.491	4-88x102.4	Gas/LPG	Euro StageV/EPA2、CARB
GCT K25	37.4/2400	176.5/1600	2.488	4-89x100	Gas/LPG	
GCT K21	31.2/2200	143.7/1600	2.065	4-89x83	Gas/LPG	
QUANCHAI 4C4-63C31	46/2500	200/1500-1875	3.17	4-98x105	Diesel	China Stage Ⅲ

WIDE VIEW FULL FREE 2-STAGE MAST

Mast model	Max. lifting height (mm)	Load capacity (load center 500mm)				Mast overall height (fork to the ground)(mm)			Free lifting height (with backrest)(mm)			Service weight(kg)				Mast tilting angle (°) α/β
		2t	2.5t	3t	3.5t	2-2.5t	3t	3.5t	2-2.5t	3t	3.5t	2t	2.5t	3t	3.5t	
ZM200	2000	2000	2500	3000	3500	1495	1570	1680	495	340	460	3300	3670	4270	4660	6/10
ZM250	2500	2000	2500	3000	3500	1745	1820	1930	745	590	710	3360	3730	4310	4700	6/10
ZM300	3000	2000	2500	3000	3500	1995	2080	2180	995	840	960	3430	3800	4360	4750	6/10
ZM330	3300	2000	2500	3000	3500	2145	2220	2330	1145	990	1110	3470	3840	4390	4780	6/10
ZM350	3500	2000	2500	3000	3500	2245	2320	2430	1245	1090	1210	3500	3870	4410	4800	6/10
ZM370	3700	2000	2500	3000	3500	2345	2420	2530	1345	1190	1310	3520	3890	4430	4810	6/10
ZM400	4000	2000	2400	3000 *3000	3450 *3500	2545	2620	2730	1545	1390	1510	3610	3980	4500	4890	6/10 *6/10
ZM425	4250	2000	2250 *2500	2950 *3000	3400 *3500	2670	2745	2855	1670	1515	1635	3650	4020	4530	4920	6/6 *6/6
ZM450	4500	1950 *1950	2050 *2450	2750 *3000	3300 *3350	2795	2870	2980	1795	1640	1760	3680	4050	4550	4960	6/6 *6/6
ZM500	5000	1600 *1850	1650 *2300	2500 *3000	3000 *3200	3045	3120	3230	2045	1890	2010	3750	4120	4600	5000	6/6 *6/6
ZM550	5500	*1750	*2100	*2850	*2900	3345	3420	3530	2345	2190	2310	3860	4230	4690	5040	*3/6
ZM600	6000	*1700	*1800	*2750	*2300	3595	3670	3780	2595	2440	2560	3930	4300	4740	5090	*3/6

Note:(1) *stands for the rated capacity when the front tyre is double-tyre.
(2) When the front tyre of the 2-3.5t truck is double tyre, the service weight of the truck is the weight in the table plus 110kg.
(3) The free lifting height (without backrest) of the 2-2.5t truck is the height (with backrest) in the table plus 432mm. The free lifting height (without backrest) of the 3t truck is the height (with backrest) in the table plus 568mm. The free lifting height (without backrest) of the 3.5t truck is the height (with backrest) in the table plus 505mm.

WIDE VIEW FULL FREE 3-STAGE MAST

Mast model	Max. lifting height (mm)	Load capacity (load center 500mm)				Mast overall height (fork to the ground)(mm)			Free lifting height (with backrest)(mm)			Service weight(kg)				Mast tilting angle (°) α/β
		2t	2.5t	3t	3.5t	2-2.5t	3t	3.5t	2-2.5t	3t	3.5t	2t	2.5t	3t	3.5t	
ZSM360	3600	2000	2500	3000	3300	1795	1930	1930	795	705	710	3520	3890	4510	4770	6/6
ZSM400	4000	2000	2400	2900	3300	1920	2055	2055	920	830	835	3550	3920	4540	4800	6/6
ZSM435	4350	1950 *1950	2250 *2450	2850 *2950	3300 *3300	2045	2180	2180	1045	955	960	3580	3950	4580	4840	6/6 *6/6
ZSM450	4500	1900 *1900	2150 *2400	2800 *2900	3200 *3250	2095	2230	2230	1095	1005	1010	3600	3970	4590	4850	6/6 *6/6
ZSM470	4700	1850 *1850	2000 *2350	2700 *2850	3150 *3200	2160	2230	2230	1160	1005	1010	3610	3980	4590	4850	6/6 *6/6
ZSM480	4800	1850 *1850	1950 *2350	2600 *2800	3050 *3200	2195	2330	2330	1195	1105	1110	3620	3990	4620	4880	6/6 *6/6
ZSM500	5000	1550 *1800	1600 *2300	2450 *2750	2900 *3050	2295	2430	2430	1295	1205	1210	3650	4020	4640	4910	6/6 *6/6
ZSM540	5400	1400 *1750	1500 *2150	2250 *2650	2600 *2800	2420	2555	2555	1420	1330	1335	3680	4050	4680	4940	6/6 *6/6
ZSM600	6000	*1600	*1800	*2150	*2400	2645	2780	2780	1645	1555	1560	3780	4150	4780	5040	6/6 *6/6

Note:(1) *stands for the rated capacity when the front tyre is double-tyre.
(2) When the front tyre of the 2-3.5t truck is double tyre, the service weight of the truck is the weight in the table plus 110kg.
(3)The free lifting height (without backrest) of the 2-2.5t truck is the height (with backrest) in the table plus 445mm. The free lifting height (without backrest) of the 3-3.5t truck is the height (with backrest) in the table plus 554mm.